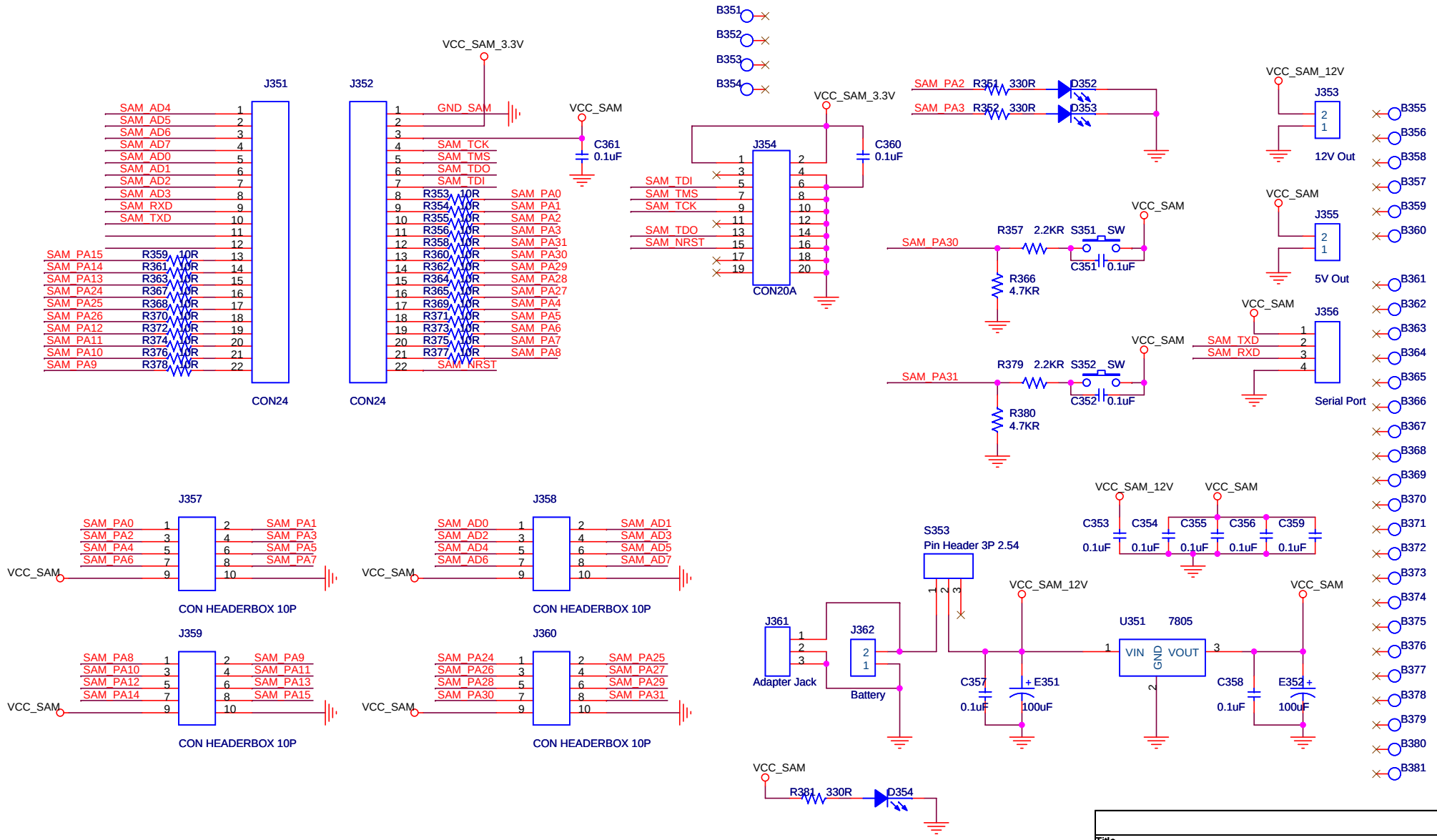

Title <Title>		
Size Custom	Document Number <Doc>	Rev <RevCode>
Date: Wednesday, October 29, 2008	Sheet 1 of 1	